

SOLID TO SUCCEED

XCMG

PT SOLUSI INDO PERDANA
BE PRODUCTIVE, BE SOLUTIVE FOR MATERIAL HANDLING

Head Office :
Ruko Pesona Gintung Residence, Blok AA No. 06, Cempaka Putih, Ciputat Timur, Tangsel 15412

Branch Office :
Jl. Sultan Hasanudin KM.41 No. 2 Blok E24, Tambun, Kec. Tambun Selatan, Kab. Bekasi – 17510

Email :
sales@alatberatsip.co.id

Hotline Service :
(021) 7433477 / 087720101020

XCMG PT SOLUSI INDO PERDANA
BE PRODUCTIVE, BE SOLUTIVE FOR MATERIAL HANDLING

1.5-3.8t

Kung-Peng Series Electric Counterbalanced Forklift



XCMG Special Construction Machinery Co., Ltd.

Serialization Design, Elegant Appearance;

Lithium Battery and Lead-acid Battery Are Exchangedable,

Strong Universality.



Comfortable, Practicable & Handy

Relay on XCMG own core technology and parts, Kung-Peng Series Electric Counterbalanced Forklift practice the “Leading Technology, Everlasting Products” Golden Standard, produce mid-to-high end electric forklifts product with high cost performance ratio.

· High-efficiency Kung-Peng Single Drive Type C, overall performance surpass traditional electric forklifts, high operating efficiency.

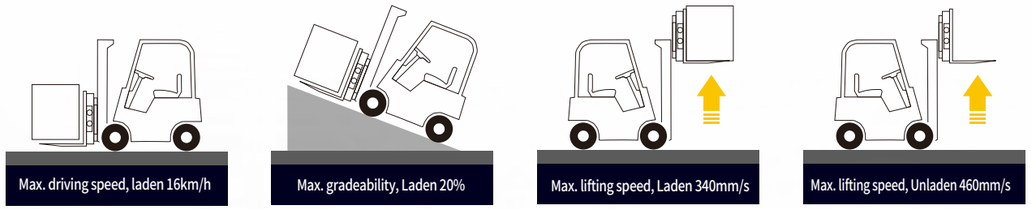

P.s: display data only suitable for XCB30P2-C/P5-C/L2-C/L5-C model, for other data please check technical data sheet.

· Unlimited cruising ability lead-acid and lithium battery can be fast replaced, handy for multiple working schedules or battery charging free area.



· Easy maintenance

floor pad and balanc-ing-weight cover are easy disassembly, main mainte-nance parts are located at front or rear conspicuous positions.



· Excellent applicability

PSE three gear switch to fulfill different speed or different acceleration needs.











* Optional thumb operating system

· Ergonomic

Wide view mast, USB port, Cup holder, Cell phone holder, three gears and wide space form excellent ergonomic.



Steady, Reliable and Durable

· Important parts had passed market tests and been proved their durability

Kung-Peng' s driving axle, turning axle and mast all have great market stocks.

· Lithium battery have pass all necessary tests

protection level ≥ IP67, great overall protection; Use active equalization Battery Manage System technology, can great reduce battery voltage differences, improve battery consistency and life span.


Low temperature tests


Rainfall test


Vibration Test


Electric Performance Test

·High Environmental Adaptation


Overall forklifts pass IPX4 waterproof tests


Wading Test


Climbing Test


Stability Test

Lithium and Lead acid Battery Shares Unified frame

· Universal Design 1.5-3.8t Kung-Peng Forklifts' Overhead guard, Covers, Display panel can be exchanged.

· Applicability Design Suitable for different operation condition.



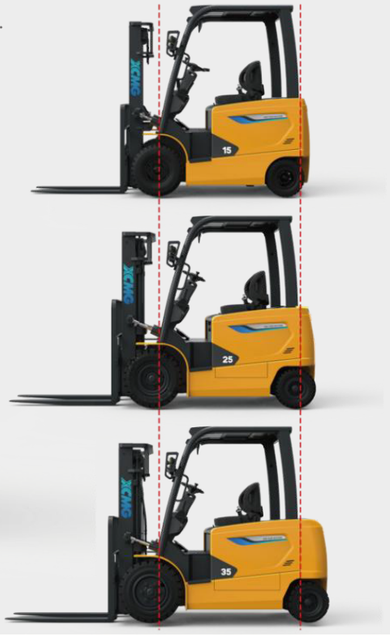

①: Mast is sturdy and durable, had been tested by markets;
②: Large Tires Design, strong road grip;
③: High ground clearance, great passing ability;
④: Use electric forklift' s balancing weight, less turning radius; Lower center of gravity, much safer while unladen;
⑤: Integrated balancing weight design, better gravity center layout, great load capacity.

· Lead-acid and Lithium battery use the same forklift frame, easy for switch battery



The same capacity Lithium battery can be used in different tonnage forklifts

Wide Vision Standard Mast: 1.5t、1.8t、2t(x)、2t、2.5t、3t、3.5t、3.8t

Mast Model	Max Lift Height (mm)	Mast Overall Height(Fork Lowered,Mast Upright)(mm)					Free Lifting Height(With Fork Carriage)(mm)					Mast Tilting Angle α/β(°)	
		1.5t-2t(x)	2t-2.5t	3t	3.5t	3.8t	1.5t-2t(x)	2t-2.5t	3t	3.5t	3.8t	1.5t-2t(x)	2-3.8t
M200	2000	1495	1500	1570	1620	1680	155	150	155	160	160	6/10	6/12
M250	2500	1745	1750	1820	1870	1930	155	150	155	160	160	6/10	6/12
M300	3000	1995	2000	2070	2120	2180	155	150	155	160	160	6/10	6/12
M330	3300	2145	2150	2220	2270	2330	155	150	155	160	160	6/10	6/12
M350	3500	2245	2250	2320	2370	2430	155	150	155	160	160	6/10	6/12
M370	3700	2345	2350	2420	2470	2530	155	150	155	160	160	6/6	6/6
M400	4000	2545	2550	2620	2670	2730	155	150	155	160	160	6/6	6/6
M425	4250	2670	2675	2745	2795	2855	155	150	155	160	160	6/6	6/6
M450	4500	2795	2800	2870	2920	2980	155	150	155	160	160	6/6	6/6
M500	5000	3045	3050	3120	3170	3230	155	150	155	160	160	6/6	6/6
M550	5500	3345	3350	3420	3470	3530	155	150	155	160	160	3/6	3/6
M600	6000	3595	3600	3670	3720	3780	155	150	155	160	160	3/6	3/6

Wide Vision Two Stage Full Free Lifting Mast: 1.5t、1.8t、2t(x)、2t、2.5t、3t、3.5t、3.8t

Mast Model	Max Lift Height (mm)	Mast Overall Height(Fork Lowered,Mast Upright)(mm)					Free Lifting Height(With Fork Carriage)(mm)					Mast Tilting Angle α/β(°)	
		1.5t-2t(x)	2t-2.5t	3t	3.5t	3.8t	1.5t-2t(x)	2t-2.5t	3t	3.5t	3.8t	1.5t-2t(x)	2-3.8t
F200	2000	1495	1500	1570	1620	1680	448	496	388	443	503	6/10	6/12
F250	2500	1745	1750	1820	1870	1930	698	746	638	693	753	6/10	6/12
F300	3000	1995	2000	2070	2120	2180	948	996	888	943	1003	6/10	6/12
F330	3300	2145	2150	2220	2270	2330	1098	1146	1038	1093	1153	6/10	6/12
F350	3500	2245	2250	2320	2370	2430	1198	1246	1138	1193	1253	6/10	6/12
F370	3700	2345	2350	2420	2470	2530	1298	1346	1238	1293	1353	6/6	6/6
F400	4000	2545	2550	2620	2670	2730	1498	1546	1438	1493	1553	6/6	6/6

1.5t-2t(x): without fork carriage, free lifting height increase 379mm
2.0t-2.5t: without fork carriage, free lifting height increase 376mm
3.0t: without fork carriage, free lifting height increase 485mm
3.5t: without fork carriage, free lifting height increase 435mm
3.8t: without fork carriage, free lifting height increase 381mm

Wide Vision Three Stage Full Free Lifting Mast: 1.5t、1.8t、2t(x)、2t、2.5t、3t、3.5t、3.8t

Mast Model	Max Lift Height (mm)	Mast Overall Height(Fork Lowered,Mast Upright)(mm)					Free Lifting Height(With Fork Carriage)(mm)					Mast Tilting Angle α/β(°)	
		1.5t-2t(x)	2t-2.5t	3t	3.5t	3.8t	1.5t-2t(x)	2t-2.5t	3t	3.5t	3.8t	1.5t-2t(x)	2-3.8t
T360	3600	1790	1800	1870	1870	1930	743	796	688	693	700	6/6	6/6
T400	4000	1925	1950	2020	2020	2055	873	946	838	843	850	6/6	6/6
T435	4350	2040	2050	2120	2120	2180	993	1046	938	943	950	6/6	6/6
T450	4500	2090	2100	2170	2170	2230	1043	1096	988	993	1000	6/6	6/6
T470	4700	2160	2160	2230	2230	2295	1103	1160	1048	1053	1060	6/6	6/6
T480	4800	2190	2210	2270	2270	2330	1143	1206	1088	1093	1100	6/6	6/6
T500	5000	2290	2300	2370	2370	2430	1243	1296	1188	1193	1200	3/6	6/6
T540	5400	2415	2400	2470	2470	2555	1363	1396	1288	1293	1300	3/6	3/6
T600	6000	2640	2600	2670	2670	2780	1553	1596	1488	1493	1500	3/6	3/6
T650	6500	—	2800	2870	2870	—	—	1796	1688	1693	—	—	3/3
T700	7000	—	2975	3045	3045	—	—	1971	1863	1868	—	—	3/3
T750	7500	—	3150	3370	3370	—	—	2146	2188	2193	—	—	3/3

1.5t-2t(x): without fork carriage, free lifting height increase 480mm
2.0t-2.5t: without fork carriage, free lifting height increase 356mm
3.0t-3.5t: without fork carriage, free lifting height increase 435mm
3.8t: without fork carriage, free lifting height increase 381mm

Two Stage Mast Load Capacity: : 1.5t、1.8t、2t(x)、2t、2.5t、3t、3.5t、3.8t

Mast Model	Max Lifting Height (mm)	Front Wheel Type	Load Capacity(Load Center Distance 500mm)(kg)							
			1.5t	1.8t	2t(x)	2t	2.5t	3t	3.5t	3.8t
M200/F200	2000	Standard	1500	1800	2000	2000	2500	3000	3500	3800
M250/F250	2500	Standard	1500	1800	2000	2000	2500	3000	3500	3800
M300/F300	3000	Standard	1500	1800	2000	2000	2500	3000	3500	3800
M330/F330	3300	Standard	1500	1800	2000	2000	2500	3000	3500	3800
M350/F350	3500	Standard	1500	1800	2000	2000	2500	3000	3500	3800
M370/F370	3700	Standard	1500	1800	2000	2000	2500	3000	3500	3800
M400/F400	4000	Standard	1500	1800	2000	2000	2500	3000	3500	3700
		Wide Tires	1500	1800	2000	2000	2500	3000	3500	3800
		Dual Front Tires	1500	1800	2000	2000	2500	3000	3500	3800
M425	4250	Standard	1500	1800	1950	1950	2450	2850	3300	3500
		Wide Tires	1500	1800	1950	1950	2450	2900	3400	3600
		Dual Front Tires	1500	1800	1950	2000	2500	2900	3400	3650
M450	4500	Standard	1450	1650	1750	1900	2300	2750	3150	3300
		Wide Tires	1450	1750	1750	1950	2400	2800	3200	3400
		Dual Front Tires	1450	1750	1750	1950	2400	2850	3350	3600
M500	5000	Standard	1200	1400	1500	1800	2100	2400	2850	2950
		Wide Tires	1250	1500	1550	1850	2150	2500	2850	3000
		Dual Front Tires	1300	1600	1600	1850	2200	2800	2900	3200
M550	5500	Standard	1000	1100	1300	1450	1500	2250	2350	2500
		Wide Tires	1100	1300	1400	1600	1800	2400	2500	2700
		Dual Front Tires	1250	1550	1550	1700	2150	2650	2700	3000
M600	6000	Standard	800	900	900	1050	1150	1500	1650	1800
		Wide Tires	900	1100	1200	1300	1400	1700	1900	2200
		Dual Front Tires	1200	1450	1450	1600	1800	2200	2400	2600

Three Stage Mast Load Capacity: 1.5t、1.8t、2t(x)、2t、2.5t、3t、3.5t、3.8t

Mast Model	Max Lifting Height (mm)	Front Wheel Type	Load Capacity(Load Center Distance 500mm)(kg)							
			1.5t	1.8t	2t(x)	2t	2.5t	3t	3.5t	3.8t
T360	3600	Standard	1500	1800	2000	2000	2500	3000	3500	3800
T400	4000	Standard	1500	1800	2000	2000	2500	3000	3500	3700
		Wide Tires	1500	1800	2000	2000	2500	3000	3500	3800
		Dual Front Tires	1500	1800	2000	2000	2500	3000	3500	3800
T435	4350	Standard	1450	1700	1850	1900	2400	2850	3200	3500
		Wide Tires	1500	1800	1900	1950	2450	2900	3350	3550
		Dual Front Tires	1500	1800	1900	2000	2500	2900	3350	3600
T450	4500	Standard	1450	1650	1750	1850	2300	2700	3050	3300
		Wide Tires	1450	1750	1750	1900	2350	2800	3150	3400
		Dual Front Tires	1500	1750	1750	1900	2350	2850	3200	3600
T470	4700	Standard	1400	1600	1650	1800	2200	2650	2900	3000
		Wide Tires	1450	1650	1650	1850	2250	2750	2900	3150
		Dual Front Tires	1450	1650	1650	1850	2250	2800	2950	3200
T480	4800	Standard	1350	1550	1650	1800	2200	2600	2900	3000
		Wide Tires	1400	1600	1650	1800	2200	2700	2900	3150
		Dual Front Tires	1400	1650	1650	1800	2250	2750	2950	3200
T500	5000	Standard	1200	1400	1500	1700	2100	2400	2800	2950
		Wide Tires	1250	1500	1550	1750	2150	2500	2850	3000
		Dual Front Tires	1300	1600	1600	1800	2200	2750	2900	3200
T540	5400	Standard	1000	1100	1300	1450	1500	2250	2350	2500
		Wide Tires	1100	1300	1400	1600	1800	2400	2500	2700
		Dual Front Tires	1250	1550	1550	1700	2150	2650	2700	3000
T600	6000	Standard	800	900	900	1000	1100	1500	1650	1800
		Wide Tires	900	1100	1200	1300	1400	1700	1900	2200
		Dual Front Tires	1200	1450	1450	1600	1800	2200	2400	2600
T650	6500	Standard	—	—	—	700	800	1250	1300	1300
		Wide Tires	—	—	—	1000	1200	1500	1600	1600
		Dual Front Tires	—	—	—	1450	1650	2000	2200	2200
T700	7000	Standard	—	—	—	300	400	850	1000	1000
		Wide Tires	—	—	—	600	700	1000	1200	1200
		Dual Front Tires	—	—	—	1150	1300	1800	2000	2000
T750	7500	Standard	—	—	—	—	—	—	—	—
		Wide Tires	—	—	—	300	400	600	700	700
		Dual Front Tires	—	—	—	950	1050	1200	1300	1300

1.5t-2t(x): while use wide tires, fender width increase 120mm; while use dual front wheels, fender width increase 400mm;2.0t-2.5t: while use wide tires, fender width increase 80mm; while use dual front wheels, fender width increase 350mm;3.0t-3.8t: while use wide tires, fender width increase 140mm; while use dual front wheels, fender width increase 500mm.

Technical parameter table 1

Features	1.1	Manufacturer		XCMG							
	1.2	Model		XCB15	XCB18	XCB20	XCB20	XCB25	XCB30	XCB35	XCB38
	1.2a	Configuration Number		L2-C/L5-C	L2-C/L5-C	LX2-C/LX5-C	L2-C/L5-C	L2-C/L5-C	L2-C/L5-C	L2-C/L5-C	L2-C/L5-C
	1.3	Battery Type		Lithium Battery							
	1.4	Opreation Type		Sit down Type							
	1.5	Rated Load Capacity	Q(kg)	1500	1800	2000	2000	2500	3000	3500	3800
	1.6	Load Centre Distance	c(mm)	500	500	500	500	500	500	500	500
	1.8	Front Overhanging Distance	x(mm)	408	408	413	460	460	477	482	482
	1.9	Wheelbase	y(mm)	1440	1440	1440	1606	1606	1750	1750	1780
Weight	2.1	Weight(included battery)	(kg)	3015	3115	3215	3930	4250	4900	5400	5600
	2.2	Axle Full Load, front/rear	(kg)	3765/750	4245/670	4565/650	5200/730	6020/730	7080/820	8010/890	8490/910
	2.3	Axle Rear Load, front/rear	(kg)	1320/1695	1310/1805	1305/1910	2000/1930	2030/2220	2340/2560	2450/2950	2525/3075
Wheels	3.1	Tires Type, front/rear		Air Tires/Air Tires					Air Tires/Solid Tires	Solid Tires/ Solid Tires	
	3.2	Tires Size, front		6.50-10-12PR	6.50-10-12PR	6.50-10-12PR	7.00-12-14PR	7.00-12-14PR	28×9-15-14PR	28×9-15	28×9-15
	3.3	Tires Size, rear		16×6-8-16PR	16×6-8-16PR	16×6-8-16PR	18×7-8-14PR	18×7-8-14PR	18×7-8	200/50-10	200/50-10
	3.5	Tires Number, front/rear(x= driving wheels)		2x/2							
	3.6	Wheel Distance, front	b10(mm)	930	930	930	970	970	1006	1006	1003
	3.7	Wheel Distance, rear	b11(mm)	910	910	910	970	970	986	970	970
Dimensions	4.1	Mast Tilting Angle, front/rear	α/β(°)	6/10	6/10	6/10	6/12	6/12	6/12	6/12	6/12
	4.2	Mast Retraction Height	h1(mm)	1995	1995	1995	2000	2000	2070	2120	2180
	4.3	Mast Free Lifting Height	h2(mm)	155	155	155	150	150	155	160	160
	4.4	Max Lifting Height	h3(mm)	3000							
	4.5	Mast Max Height	h4(mm)	4065	4065	4065	4100	4100	4217	4217	4217
	4.7	Roof Protection Height	h6(mm)	2140	2140	2140	2170	2170	2180	2180	2180
	4.8	Seat to Ground Height	h7(mm)	1150	1150	1150	1194	1194	1204	1204	1204
	4.12	Traction Pin Height	h10(mm)	300	300	300	328	328	332	332	332
	4.19	Overall Length(inclued forks)	l1(mm)	3105	3105	3105	3316	3466	3610	3615	3650
	4.20	Overall Length(without forks)	l2(mm)	2185	2185	2185	2396	2396	2540	2545	2580
	4.21	Overall width	b1(mm)	1120	1120	1120	1250	1250	1250	1250	1250
	4.22	Fork Size (Thickness/Width/Length)	s/e/l(mm)	35/100/920	35/100/920	40/100/920	40/120/920	40/120/1070	45/122/1070	50/122/1070	50/122×1070
	4.23	Fork Carriage ISO2328		2A	2A	2A	2A	2A	3A	3A	3A
	4.24	Width of rack	b3(mm)	1018	1018	1018	1088	1088	1148	1148	1148
	4.31	Mast Ground Clearance, full-load	m1(mm)	110	110	110	110	110	130	130	125
	4.32	Wheelbase Center Ground Clearance, full-load	m2(mm)	120	120	120	130	130	135	135	135
	4.34.1	Right Angel Aisle Width, pallet 1000x1200	Ast(mm)	3510	3510	3515	3730	3730	3897	3902	3932
	4.34.2	Right Angel Aisle Width, pallet 800x1200	Ast(mm)	3708	3708	3713	3930	3930	4097	4102	4132
	4.35	Outside Turning Radius	Wa	1900	1900	1900	2070	2070	2220	2220	2250
Performance	5.1	Driving Speed, full-load/ empty-load	(km/h)	16/17	16/17	15.5/17	16/17	16/17	16/17	16/17	15.5/17
	5.2	Lifting Speed, full-load/ empty-load	(m/s)	0.34/0.46	0.31/0.46	0.3/0.46	0.35/0.46	0.31/0.46	0.34/0.46	0.31/0.46	0.29/0.46
	5.3	Lowering Speed, full-load/ empty-load	(m/s)	0.4/0.4	0.4/0.4	0.4/0.4	0.45/0.50	0.45/0.50	0.47/0.5	0.47/0.5	0.47/0.5
	5.6	Max Traction, full-load	(N)	11100	11100	11100	16500	16500	20000	18500	18300
	5.8	Max Gradeability, full-load/ empty-load	(%)	20/27	18/26	17/25	20/25	18/25	20/25	18/25	16/25
	5.9	Accelaration time(10 meters), full-load/ empty-load	(s)	6/5.5							
	5.10	Service Brake/ Park Brake		Hydrualic/ Mechnaic							
Drive	6.1	Power of Traction Motor, S2-60 min working system	(kW)	8	8	8	11	11	15	15	15
	6.2	Power of Lifting Motor, S3-15% working system	(kW)	10	10	10	13	13	18	18	18
	6.3	Batttery, DIN43531/35/36 A,B,C		—	—	—	—	—	—	—	—
	6.4	Battery Capacity	(V/Ah)	80/206	80/206	80/206	80/280	80/280	80/350	80/350	80/350
	6.5	Battery Weight(±5%)	(kg)	270	270	270	300	300	375	375	375
Others	8.1	Controller Type		MOS Tube/AC							
	8.2	Attachment Operation Pressure	(MPa)	14.5	17.5	18.5	14.5	17.5	17.5	17.5	18.5

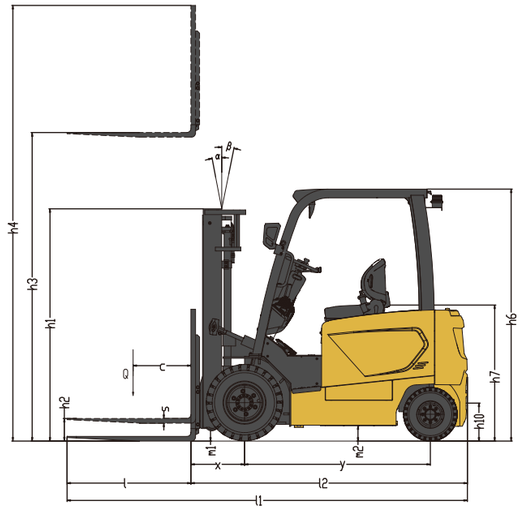

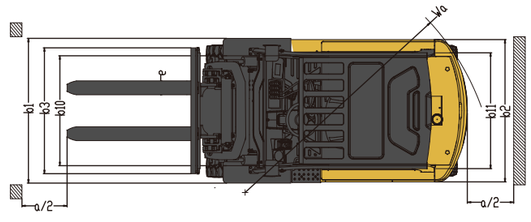

Load Curve Diagram

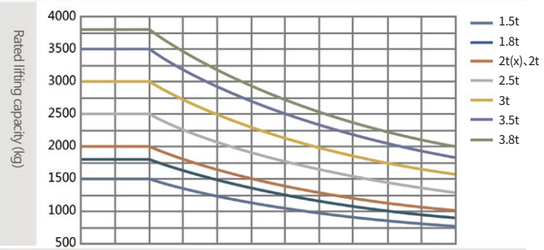

With the technical progress, the product structure and specifications shall be subject to update without further notice. In case of any differences between the specifications and product, the product shall prevail.

Technical parameter table 2

Features	1.1	Manufacturer		XCMG							
	1.2	Model		XCB15	XCB18	XCB20	XCB20	XCB25	XCB30	XCB35	XCB38
	1.2a	Configuration Number		P2-C/P5-C	P2-C/P5-C	PX2-C/PX5-C	P2-C/P5-C	P2-C/P5-C	P2-C/P5-C	P2-C/P5-C	P2-C/P5-C
	1.3	Battery Type		Lead-acid Battery							
	1.4	Opreation Type		Sit down Type							
	1.5	Rated Load Capacity	Q(kg)	1500	1800	2000	2000	2500	3000	3500	3800
	1.6	Load Centre Distance	c(mm)	500	500	500	500	500	500	500	500
	1.8	Front Overhanging Distance	x(mm)	408	408	413	460	460	477	482	482
	1.9	Wheelbase	y(mm)	1440	1440	1440	1606	1606	1750	1750	1780
Weight	2.1	Weight(included battery)	(kg)	3130	3230	3330	3930	4250	4900	5400	5600
	2.2	Axle Full Load, front/rear	(kg)	3860/770	4340/690	4660/670	5200/730	6020/730	7080/820	8010/890	8490/910
	2.3	Axle Rear Load, front/rear	(kg)	1415/1715	1405/1825	1400/1930	2000/1930	2030/2220	2340/2560	2450/2950	2525/3075
Wheels	3.1	Tires Type, front/rear		Air Tires/Air Tires					Air Tires/Solid Tires	Solid Tires/ Solid Tires	
	3.2	Tires Size, front		6.50-10-12PR	6.50-10-12PR	6.50-10-12PR	7.00-12-14PR	7.00-12-14PR	28×9-15-14PR	28×9-15	28×9-15
	3.3	Tires Size, rear		16×6-8-16PR	16×6-8-16PR	16×6-8-16PR	18×7-8-14PR	18×7-8-14PR	18×7-8	200/50-10	200/50-10
	3.5	Tires Number, front/rear(x= driving wheels)		2x/2							
	3.6	Wheel Distance, front	b10(mm)	930	930	930	970	970	1006	1006	1003
	3.7	Wheel Distance, rear	b11(mm)	910	910	910	970	970	986	970	970
Dimensions	4.1	Mast Tilting Angle, front/rear	α/β(°)	6/10	6/10	6/10	6/12	6/12	6/12	6/12	6/12
	4.2	Mast Retraction Height	h1(mm)	1995	1995	1995	2000	2000	2070	2120	2180
	4.3	Mast Free Lifting Height	h2(mm)	155	155	155	150	150	155	160	160
	4.4	Max Lifting Height	h3(mm)	3000							
	4.5	Mast Max Height	h4(mm)	4065	4065	4065	4100	4100	4217	4217	4217
	4.7	Roof Protection Height	h6(mm)	2140	2140	2140	2170	2170	2180	2180	2180
	4.8	Seat to Ground Height	h7(mm)	1150	1150	1150	1194	1194	1204	1204	1204
	4.12	Traction Pin Height	h10(mm)	300	300	300	328	328	332	332	332
	4.19	Overall Length(inclued forks)	l1(mm)	3105	3105	3105	3316	3466	3610	3615	3650
	4.20	Overall Length(without forks)	l2(mm)	2185	2185	2185	2396	2396	2540	2545	2580
	4.21	Overall width	b1(mm)	1120	1120	1120	1250	1250	1250	1250	1250
	4.22	Fork Size (Thickness/Width/Length)	s/e/l(mm)	35/100/920	35/100/920	40/100/920	40/120/920	40/120/1070	45/122/1070	50/122/1070	50/122/1070
	4.23	Fork Carriage ISO2328		2A	2A	2A	2A	2A	3A	3A	3A
	4.24	Width of rack	b3(mm)	1018	1018	1018	1088	1088	1148	1148	1148
	4.31	Mast Ground Clearance, full-load	m1(mm)	110	110	110	110	110	130	130	125
	4.32	Wheelbase Center Ground Clearance, full-load	m2(mm)	120	120	120	130	130	135	135	135
	4.34.1	Right Angel Aisle Width, pallet 1000x1200	Ast(mm)	3510	3510	3515	3730	3730	3897	3902	3932
	4.34.2	Right Angel Aisle Width, pallet 800x1200	Ast(mm)	3708	3708	3713	3930	3930	4097	4102	4132
	4.35	Outside Turning Radius	Wa	1900	1900	1900	2070	2070	2220	2220	2250
Performance	5.1	Driving Speed, full-load/ empty-load	(km/h)	16/17	16/17	15.5/17	16/17	16/17	16/17	16/17	15.5/17
	5.2	Lifting Speed, full-load/ empty-load	(m/s)	0.34/0.46	0.31/0.46	0.3/0.46	0.35/0.46	0.31/0.46	0.34/0.46	0.31/0.46	0.29/0.46
	5.3	Lowering Speed, full-load/ empty-load	(m/s)	0.4/0.4	0.4/0.4	0.4/0.4	0.45/0.50	0.45/0.50	0.47/0.5	0.47/0.5	0.47/0.5
	5.6	Max Traction, full-load	(N)	11100	11100	11100	16500	16500	20000	18500	18300
	5.8	Max Gradeability, full-load/ empty-load	(%)	20/27	18/26	17/25	20/25	18/25	20/25	18/25	16/25
	5.9	Accelaration time(10 meters), full-load/ empty-load	(s)	6/5.5							
	5.10	Service Brake/ Park Brake		Hydraulic/ Mechnaic							
Drive	6.1	Power of Traction Motor, S2-60 min working system	(kW)	8	8	8	11	11	15	15	15
	6.2	Power of Lifting Motor, S3-15% working system	(kW)	10	10	10	13	13	18	18	18
	6.3	Batttery, DIN43531/35/36 A,B,C		DIN43536A	DIN43536A	DIN43536A	DIN43536A	DIN43536A	DIN43536A	DIN43536A	DIN43536A
	6.4	Battery Capacity	(V/Ah)	80/240	80/240	80/280	80/360	80/360	80/480	80/480	80/480
	6.5	Battery Weight(±5%)	(kg)	750	750	750	1010	1010	1325	1325	1325
Others	8.1	Controller Type		MOS Tube/AC							
	8.2	Attachment Operation Pressure	(MPa)	14.5	17.5	18.5	14.5	17.5	17.5	17.5	18.5

With the technical progress, the product structure and specifications shall be subject to update without further notice. In case of any differences between the specifications and product, the product shall prevail.

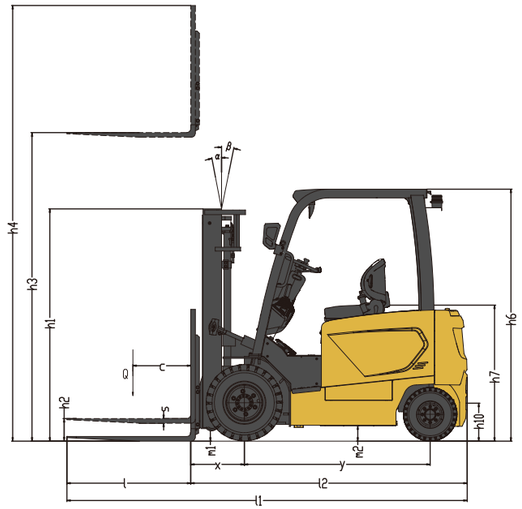

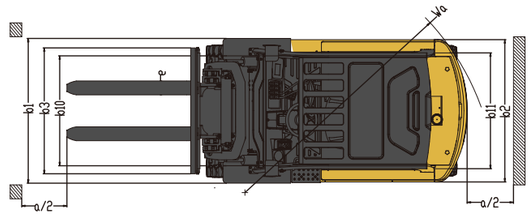

Load Curve Diagram

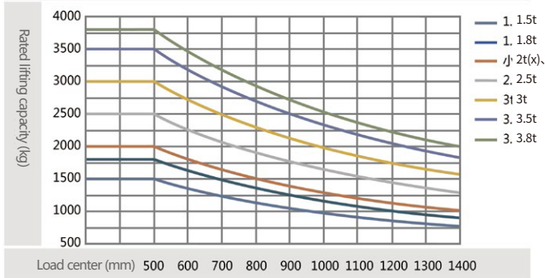

LEAD-ACID BATTERY

Voltage/Capacity	80V240Ah	80V280Ah	80V360Ah	80V420Ah	80V450Ah	80V480Ah	80V560Ah	80V600Ah
1.5t-1.8t-2.0t	★	☆	—	—	—	—	—	—
2.0t-2.5t	—	—	★	☆	☆	—	—	—
3.0t-3.5t-3.8t	—	—	—	—	—	★	☆	☆

CHARGER

Charger Voltage/Current	80V/40A	80V/40A	80V/50A	80V/60A	80V/60A	80V/70A	80V/80A	80V/80A

P.s:★Standard, ☆Options

LITHIUM BATTERY

Voltage/ Capacity	80V206Ah	80V280Ah	80V350Ah	80V412Ah	80V560Ah				
1.5t-1.8t-2.0t	★	☆	—	—	—				
2.0t-2.5t	—	★	☆	☆	—				
3.0t-3.5t-3.8t	—	—	★	☆	☆				

P.s: ★Standard, ☆Options; Dual charger is available for 80V560Ah battery capacity

Charger

Charger Model		BKDLC80100 APSP-Li-80V100A	BKDLC80200 APSP-Li-80V200A
Suitable Battery Type		48V/80V Lithium Battery	48V/80V Lithium Battery
Mode of Connection		Three Phase Four Wires（L1、L2、L3、PE）	Three Phase Four Wires（L1、L2、L3、PE）
Power of Charger	KW	⩽8.7	⩽17.5
Air Switch	A	32	63
Input Voltage Range	Vac	380±15%	380±15%
Input Current	A	＜25A	＜50A
Output Current	A	100A	200A
Protection Level		(For Indoor Use)	(For Indoor Use)
Working Temperature	℃	—20—+45	—20—+45
Power Supply Plug		National Standard Charging Gun	National Standard Charging Gun

Configuration List

Basic Function Options

Air Tires (1)	★
Front Wide Tire	☆
Front Dual Tires	☆
Environment-Friendly Solid Tires	☆
General Solid Tires	☆
M300 Mast	★
Other Masts (2)	☆
Standard Fork (3)	★
Non-Standard Fork	☆
Forklift Atta chments	☆
Charger (4)	★

Hydraulic Function Options

Two valves& pipes	★
Three valves& pipes	☆
Four valves& pipes	☆
Fingertip Control	☆
Metric Unit Hydraulic System	★
American Unit Hydraulic System	☆

Comfort Function Options

Mast Fall Buffering Function	★
Mast Lift Buffering Function	☆
Electric Fan	☆
Rear handler(inclueded horn button)	★
Steering Wheel Triger Turning Function	☆
Synchronous Steering Function	☆
Steering Automatic Slow Down Function	☆

Driver Cabin Options

Driver Cabin(included fan+ wiper)	☆
Driver Cabin+ Refrigeration Air Conditioner	☆
Driver Cabin+ Heater	☆
Driver Cabin+ Refrigeration Air Conditioner+Heater	☆
Front Windshield(included wiper)	☆
Rear Windshield	☆
Roof Windshield	☆

Safety Function Options

OPS(without mast falling OPS)	★
Full OPS Function(included mast falling OPS)	☆
Mutiple Valves Overload Protection Function	☆
Seat(included seat switch)	★
Seat(included seat switch+Seatbelt Interlock)	☆
Shock-Absorbing Seat(included seat switch)	☆
Shock-Absorbing Seat(included seat switch+Seatbelt Interlock)	☆
LED Blink Warning Light	★
LED Rotate Warning Light	☆
LED Rotate Warning Light with Buzzer	☆
Blue Spot Lamp/ Red Spot Lamp	☆
Blue Width Lamp/ Red Width Lamp	☆
Reversing Radar	☆
Reversing Radar with Camera	☆
Reversing Voice Warning	☆
Central Rearview Mirror	★
Left & Right Rearview Mirrors	☆
Left & Right Rearview Mirrors+Central Rearview Mirror	☆
One Kg Fire Extinguisher(Dry Powder)	☆
Two Kg Fire Extinguisher (Dry Powder/ Carbon Dioxide)	☆
3Kg/4Kg Fire Extinguisher (Dry Powder/ Carbon Dioxide)	☆
Overspeed Warning(8km/h or 10km/h)	☆

Other options

Lead-acid Battery Easy Fill Fluid Function	☆
Non-Universal Use Keys	★
Universal Use Keys	☆
USB Port	★
Roof Protection (extra 70mm)	☆
Roof Protection(included front protection guard)	☆
Tilt Oil Cylinder Protection	☆
Steering Oil Cylinder Protection	☆

P.s: ★Standard,☆Optional
1.5-2.5t Forklift Tires Are Pneumatic Tires;
3t Forklift Front Tires Are Air Tires, Rear Tires are solid tires;
3.5-3.8t Forklift tires are solid tires
2. For Standard Fork Specification, see details in technical data sheet
3. Charger Model see details in Charger Data Sheet

Our Company Will Continuously Update Our Products Without Prior Notices, Which Included Parameters Change or Update.